□ 85mm

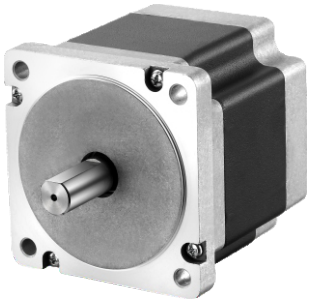

Dimension

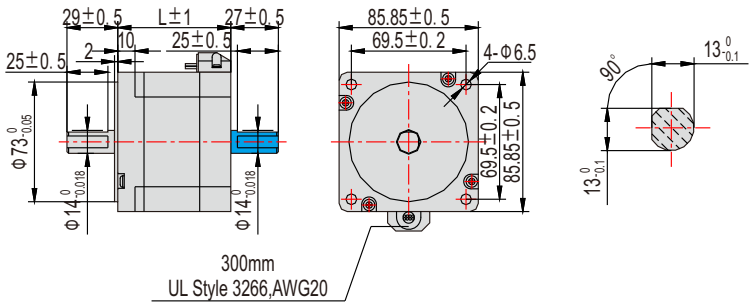

Wiring Diagram

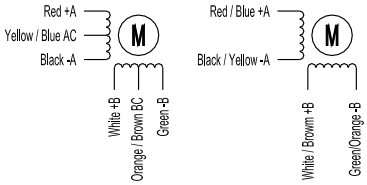

※ The above drawings are for dual shaft stepping motor, while single shaft without part
※ Costomized features are available, such as additional eccentric gear box, power off brake, encoder.
※ Spigot installation with front cover is a must when set up the motor, tolerance fiding should be taken into account, to secure the concentricity of output shaft and motor output.

Technical Parameters

Item	Specifications
Step Angle	1.8°
Step Angle Accuracy	±5%(full step,no load)
Resistance Accuracy	±10%
Inductance Accuracy	±20%
Temperature Rise	80°C Max (rated current,2 phase on)
Ambient Temperature	-20°C~+50°C
Insulation Resistance	100MΩ Min500VDC
Dielectric Strength	820V AC for one minute
Shaft Radial Force	0.02Max (450g load)
Axial Play	0.08Max (450g load)
Max Radial Force	220N (20mm from the flange)
Max Axial Force	60N

Technical Parameters

Stepper motor Model		Stepper Drive Model	Current /phase	Resistance /phase	Inductance /phase	Holding Torque	Lead	Rotor Inertia	Weight	Length
Single shaft	Double shaft		A	Ω	mH	kg-cm		g-cm²	Kg	L(mm)
YSD286-RA8	YSD286-RB8	SEA2M68 SEA2M69M SEA2M810M	4	1.4	3.9	34	8	1000	1.7	65
YSD288-RA8	YSD288-RB8		4	0.75	3.4	45	8	1400	2.3	80
YSD2812-RA8	YSD2812-RB8		6	0.9	6	85	8	2700	3.8	118
YSD2816-RA8	YSD2816-RB8		6	1.25	8	120	8	4000	5.4	156